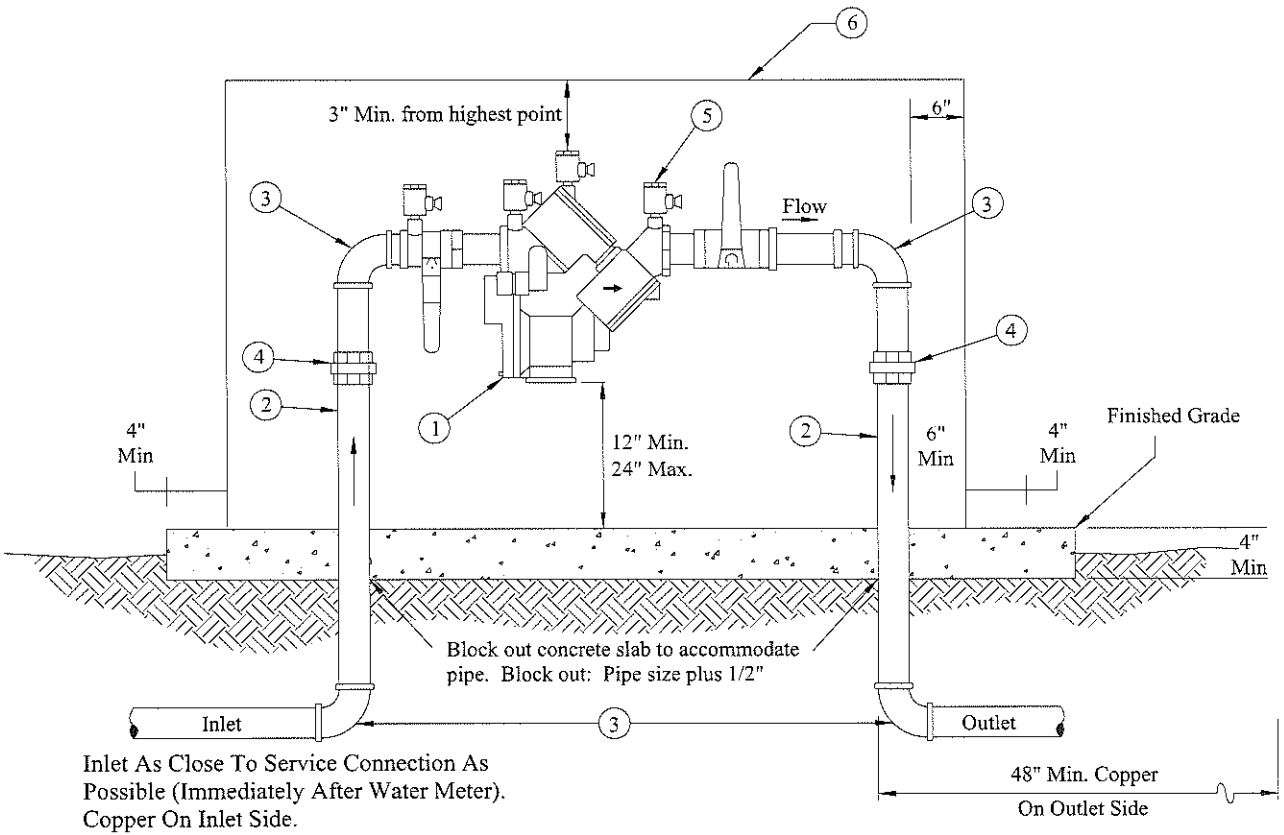

GENERAL NOTES

1. Backflow assemblies shall be tested for proper operation per the TOB requirements. All testing shall be performed by a certified tester recognized by the Town.
2. Copper fittings shall be connected with lead free solder joints.
3. Finished grade underneath the backflow preventer shall be at 95% compaction.
4. All nipples to be copper or brass.
5. Piping under the Town right of way must be type "K" copper.
6. Call for underground inspection before backfilling trench.
7. Approved backflow assemblies shall have a Seal of Approval from the American Society of Sanitization Engineers. Backflow assemblies installed on fire suppression systems must also have approval from Underwriters Laboratories and/or Factory Mutual Research Corporation..

LIST OF MATERIALS

① Approved reduced pressure principle backflow prevention assembly, (2) ball valves included.

② Pipe spool, type "L" hard copper, 3/4" thru 2 1/2".

③ 90° ell, copper, 3/4" thru 2 1/2" sweated fittings.

④ Pipe union, brass or copper.

⑤ Test cocks with brass plugs or adaptors with caps installed (Four (4) required)

⑥ Install 4" concrete pad, enclosure and hardware. Enclosure shall be "Guardshack, GS-M1" or approved equal (Min pad DIM - 32" x 18" x 4" - L x W x Thickness).

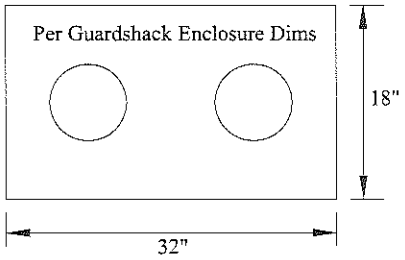

31353	Town of Buckeye Standard Details	REDUCED PRESSURE PRINCIPLE BACKFLOW ASSEMBLY, 3/4" THROUGH 2-1/2"	Revised: 12-31-12	Detail No. 31353

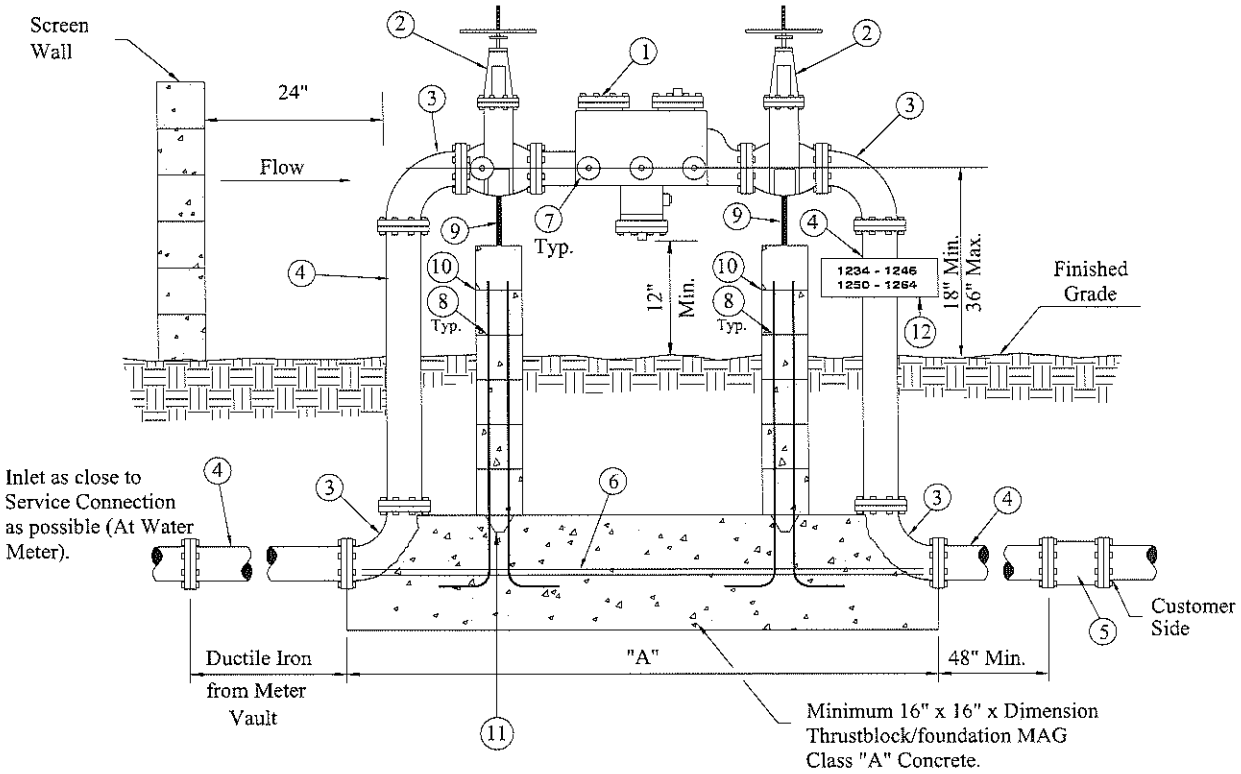

GENERAL NOTES

1. Backflow assemblies shall be tested for proper operation per the TOB requirements. All testing shall be performed by a certified tester recognized by the Town.
2. Backflow preventers shall be painted tenemec desert sands or TOB approved equal. Do not paint the name plate or any brass parts on the assembly.
3. For backflow preventers requiring guard posts see Detail 31359. Backflow preventers enclosed by screening shall maintain a 24" clearance around the assembly.
4. Finished grade underneath the backflow preventer shall be at 95% compaction.
5. Backflow preventers on fire lines may require tamper switches on the shut off valves. Contact TOB Building, or Fire Department for more information on switches.
6. Call for underground inspection before backfilling trench.
7. Approved backflow assemblies shall have a Seal of Approval from the American Society of Sanitation Engineers. Backflow assemblies installed on fire supression systems must also have approval from Underwriters Laboratories and/or Factory Mutual Research Corporation.

LIST OF MATERIALS

① Approved reduced pressure principle backflow prevention assembly.

② Resilient seated gate valve. O.S. & Y. (fire line connection). N.R.S. (non fire line).

③ 90° elbow flanged D.I.P. 3" thru 10", may be used on underground joints.

④ Pipe spool. flanged D.I.P. 3" thru 10", mega lug or approved equal may be used on underground joints.

⑤ Restrained ductile iron solid sleeves.

⑥ 3/4" zinc coated threaded rod, (5/8" rod on 3" to 4" sizes), bolt to flanges as shown, typical both sides.

⑦ Test cocks with brass plugs or adaptors with caps installed. (4 required).

⑧ #6 reinforcing steel, deformed bar, 4" apart, evenly spaced; 2" apart for 6" supports.

⑨ Adjustable pipe support permanently attached to base with minimum 1" adjusting rod.

⑩ Square or round monolythic cast in place concrete column, minimum MAG Class "A" concrete.

⑪ Construction joint key to be 1-3/4" x 2-1/2".

⑫ TOB signage per TOB Std. Dtl. 31456.

31352	Town of Buckeye Standard Details	**REDUCED PRESSURE PRINCIPLE BACKFLOW ASSEMBLY, 3" THROUGH 10"**	Revised: 12-31-12	Detail No. 31352

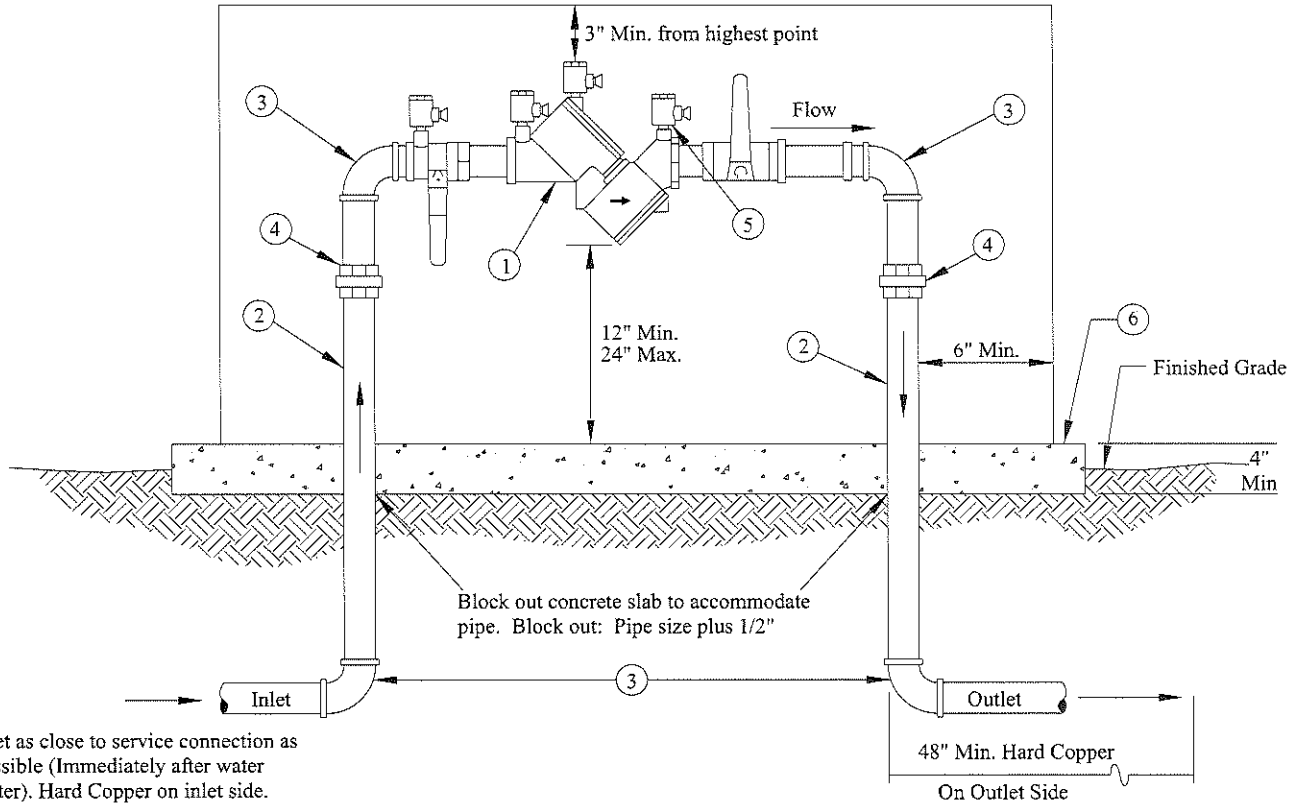

GENERAL NOTES

1. Backflow assemblies shall be tested for proper operation per the TOB requirements. All testing shall be performed by a certified tester recognized by the Town.
2. Copper fittings shall be connected with lead free solder joints.
3. Finished grade underneath the backflow preventer shall be at 95% compaction.
4. All nipples to be copper or brass.
5. Inlet / Outlet piping must be type "L" hard copper.
6. Call for underground inspection before backfilling trench.
7. Vertical installations of assemblies on fire sprinkler systems are allowed using assemblies approved for use in the vertical position on fire systems.
8. Approved backflow assemblies shall have a Seal of Approval from the American Society of Sanitation Engineers. Backflow assemblies installed on fire supression systems must also have approval from Underwriters Laboratories and/or Factory Mutual Research Corporation.

LIST OF MATERIALS

1. Approved double check valve backflow prevention assembly, (2) ball valves included.
2. Type "L" hard copper, 3/4" thru 2-1/2".
3. 90° ell, hard copper, 3/4" thru 2-1/2" sweated fitting.
4. Pipe union, brass or copper.
5. Test cocks with brass plugs or adaptors with caps installed. (4 Required)
6. Install 4" concrete pad , enclosures and hardware. Enclosures shall be "Guardshack, GS-M1" or approved equal (Minimum pad DIM 32" x 18" x 4" - L x W x Thickness).

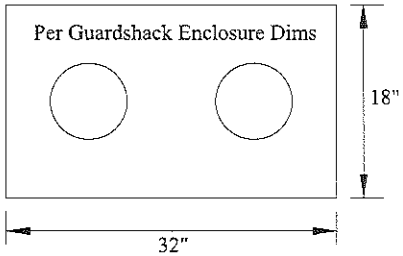

31351	Town of Buckeye Standard Details	DOUBLE CHECK VALVE ASSEMBLY, 3/4" THROUGH 2-1/2"	Revised: 12-31-12	Detail No. 31351

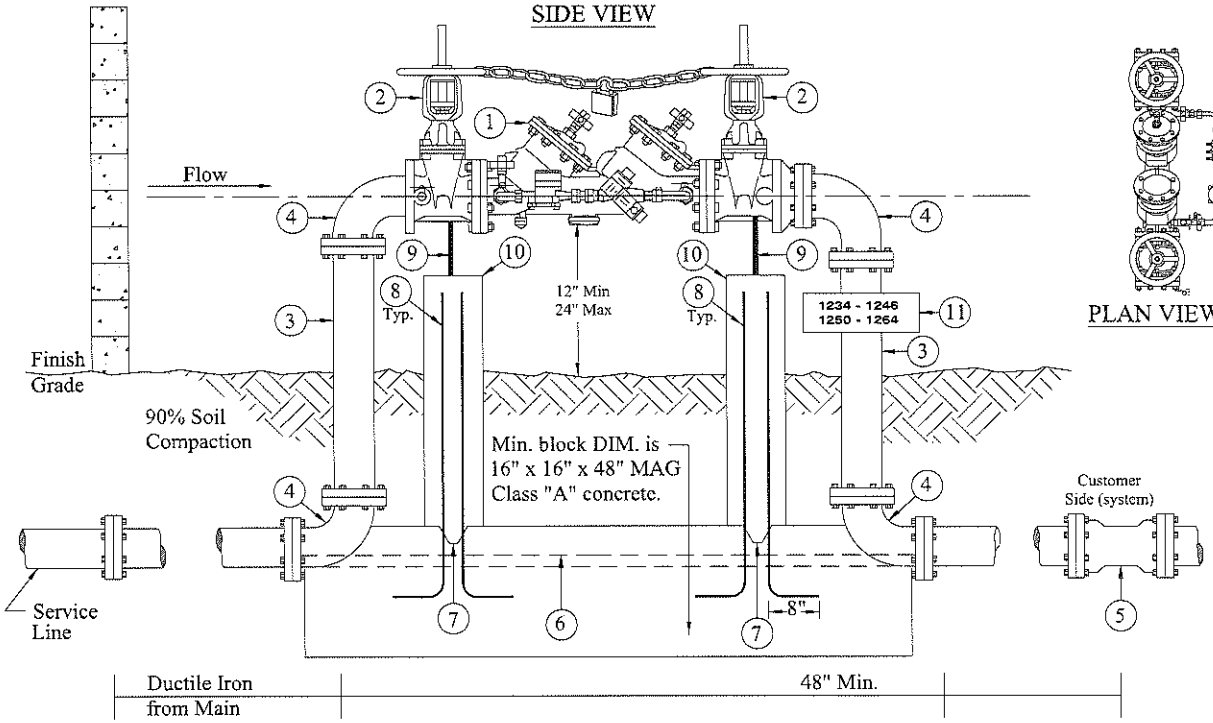

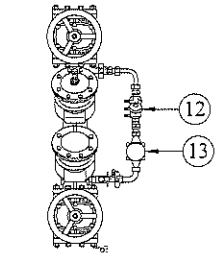

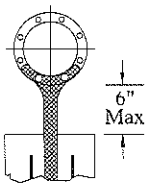

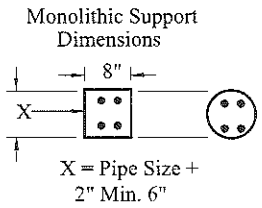

LIST OF MATERIALS

1. Approved double check valve backflow prevention assembly.
2. Resilient seated OS & Y gate valve.
3. Pipe spool. (Flanged D.I.P.)
4. 90° elbow. (Flanged D.I.P.)
5. Ductile iron solid sleeve (where required).
6. 3/4" Zinc coated threaded rod, bolted to flanges, four minimum, equally spaced. (5/8" Rods on 3" & 4" sizes)
7. Construction joint key to be 1-3/4" x 2-1/2".
8. #6 reinforcing steel, deformed bar, 4" apart, evenly spaced; 2" apart for 6" supports.
9. Adjustable pipe support permanently attached to base with minimum 1" adjusting rod.
10. Square or round monolythic castin place concrete column, minimum MAG Class "A" concrete.
11. TOB signage per TOB Std. Dtl. 31456.
12. 3/4" reduced pressure backflow per Town Requirements.
13. 3/4" meter to be supplied by the Town. Contact TOB Water Resources.

NOTES

1. Double check detector assembly with bypass meter shall be UL listed or FM approved for fire protection use and shall be as approved by U.S.C. foundation for cross-connection control and hydraulic research. This assembly is to be used for pollution hazards only as recommended in the AWWA-M14 MANUAL.
2. All piping, valves, fittings and appurtenances downstream of the service line side O.S.& Y. valve shall be approved for fire protection use and installed per N.F.P.A. #24.
3. For backflow preventers requiring guard posts See Detail 31359. Backflow preventers enclosed by screening shall maintain a 24" clearance around assembly.
4. Valve Hand wheels shall be secured with chain and lock.
5. Assemblies shall be painted tenemec desert sands or TOB approved equal. Do not paint name tags or brass parts.
6. Call for underground inspection before backfilling trench.
7. Bypass meters are required on unmetered lines.
8. Backflow assemblies shall be tested by a certified tester recognized by the Town.
9. Screenwalls and landscaping shall be no closer than 24" to the assembly.
10. Test cocks w/t Brass Plugs or adaptors w/t caps installed

31350	Town of Buckeye Standard Details	DOUBLE CHECK VALVE ASSEMBLY W/ BYPASS METER, 3" TO 10"	Revised: 12-31-12	Detail No. 31350

STANDARD GUARDSHACK™ ENCLOSURES

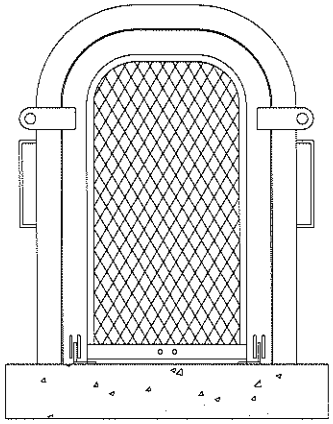

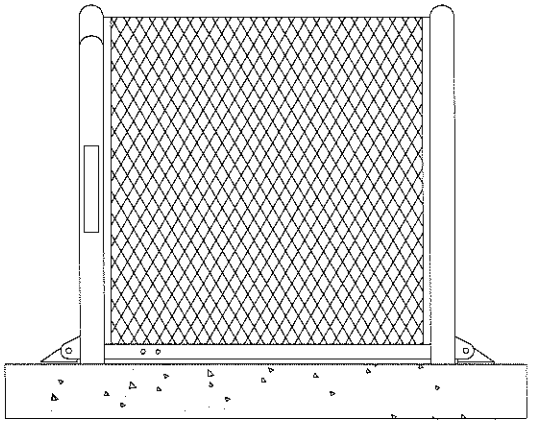

STANDARD GUARDSHACK™ AND COAST GUARDSHACK™ SIZES INTERNAL DIMENSIONS

GS - M1	16" W x 37" H x 18" L HINGED W/ GATE
GS - M2	16" W x 48" H x 18" L HINGED W/ GATE
GS - NP1	24" W x 40" H x 31" L HINGED W/ GATE
GS - NP1.5	24" W x 40" H x 38" L HINGED W/ GATE
GS - NP2	30" W x 48" H x 47" L HINGED W/ GATE
GS - NP3	38" W x 60" H x 47" L HINGED W/ GATE
GS - NP3.5	38" W x 60" H x 58" L HINGED W/ GATE

For 304 S. S. , order as CGS using same model #

GUARDSHACK™ GENERAL SPECIFICATIONS

- All pipe shall be 1 ¼" schedule 40 A.S.T.M. A-53 Grade A- Electric Weld pipe.
- Angle Iron shall be 1" x 1" x ⅛" steel.
- Stainless steel units shall be 1 ¼" schedule 10 A.S.T. M. A-312 304 S.S.
- Expanded metal shall be ½" spacing x # 13 Ga. flattened diamond pattern steel.
- Stainless steel units shall be ½" spacing x # 13 Ga. flattened expanded metal diamond pattern type 304 S.S.
- All stainless steel expanded metal shall be sandblasted prior to fabrication to remove burrs, flashing and sharp edges.
- There shall be no exposed ends of expanded metal on the outside of the enclosure.
- Welding shall be a minimum of ¼" long welds on 4" spacing.
- Standard mounting brackets shall be welded on each end of lift off enclosures.
- One bracket on hinged units shall be welded on end opposite hinges.
- Hardware kits provided for mounting enclosures.
- On 304 S.S. units, all hinges, exposed hardware, and brackets shall be 304 S.S.
- All hardware shall be securely attached to enclosures.
- All enclosures shall withstand a minimum of 200 lbs. per square foot without any permanent deflection or distortion.
- 3/8" spacing between angle iron framework of enclosure and slab to prevent rusting. Only pipe ends to touch slab.

POWDERCOATED UNITS

Pre-powdercoat Treatment Process

Clean GuardShack™ unit with a S-44 alkaline cleaner, overflow rinse, apply an AC-8115 iron phosphate treatment, overflow rinse and finish with a #198 sealer rinse to prevent rusting and improve adhesion.

Powdercoat Treatment Process

Units shall be preheated and coated by electrostatic application of 2.0 to 3.5 mil thickness on all surfaces. Powder shall be RAL 1019 Woodlands Tan or TCI 8810-6058 Forest Green or approved equal Impact Resistance Finish 160 inch pounds direct 160 inch pounds reverse, per ASTM D-2794 specs. Gloss Finish >85, per ASTM D-523. Adhesion to be rated excellent when tested to ASTM D-3359 standards.

STAINLESS STEEL ELECTRO-POLISH FINISH

All 304 Stainless Steel units shall be chemically electro-polished to impart a lustrous finish to the unit.